DS-65NPE-NLT
65-inch 4K Interactive Display



The Hikvision Interactive Flat Panel is a kind of newly developed intelligent teaching assistance product which integrates with the latest technologies of touch control, HD display, video processing, network communication, interactive control, sound control. It can be widely applied to the classroom, online teaching, training center, etc.

- UHD 4K display with resolution of 3840 × 2160.
- Anti-glare and anti-blocking design to ensure smooth interaction.
- Dual systems of Android and Windows (optional with OPS) saving cost and easy to use, video conference software are recommonded to run under Windows system.
- Quick response, at most 50-point touch control and smooth writing experience.
- Built-in network switch chip saves a network switch.
- Multi-button design in front, convenient for classroom use.
- All-in-one design with tempered glass and intelligent temperature control, making it environmental-friendly and safety-guaranteed.
- Built-in Android 16 system, EDLA Certified

▪ Specification

Product Model	
Product Model	DS-65NPE-NLT
Display	
Screen Size	65 inch
Backlight	DLED
Pixel Pitch	0.124 (H) × 0.372 (V) mm
Resolution	3840 × 2160 @60 Hz
Brightness	450 cd/m² (Max.) 400 cd/m² (Typ.)
Color Depth	10 bit
Display Color	1.07 G
Response Time	5 ms
Panel Type	VA
Contrast Ratio	5000:1 (Static) 30,000:1 (Dynamic)
Color Gamut	72% NTSC (CIE1931) (Typ.)
Refresh Rate	60 Hz
Viewing Angle	178° (H)/178° (V)
Aspect Ratio	16:9
Surface Hardness	9H (Pencil) 7 (Mohs)
Surface Glass	Anti-Glare Glass
Surface Haze	25% Haze
Glass Bonding Method	Zero Lamination
Display Area	1428.48 (H) × 803.52 (V)
Working Duration	7 × 16 H
Transmittance	88% ± 3
Lifespan	50,000 hours
Touch	
Type	Infrared Touch Screen
Touch Point	Up to 50-point multi-touch
Touch Response Time	≤ 2 ms
Minimum Touch Object	≥ 1.5 mm (≥ 90% touching area)
Touch Precision	± 0.5 mm (≥ 90% touching area)
Touch Resolution	32768 × 32768
Built-in System	
Operation System	Android 16.0
Memory	8 GB
Built-in Storage	128 GB
Processor	Quad-core Cortex-A72 × 4 (2.2 GHz) and quad-core Cortex-A53 × 4 (1.8 GHz)
GPU	Mali-G52 MC3
HDCP Version	2.3 & 2.0 & 1.4
Internal Function	
Loudspeaker	Built-in 2 × 20 W + 25 W loudspeaker;

Bluetooth	Built-in BLE (Bluetooth Low Energy) module supports Bluetooth 5.4
NFC	Support card reader 13.56 MHz, (ISO 14443A/ ISO 14443B)
Light Sensor	Yes
Interface	
Video & Audio Input	HDMI 2.0 × 3 (Front x 1; Rear x 2; Support HDCP2.3 & 2.2 & 1.4;HDMI1 Support CEC&ARC protocol) VGA × 1 (Rear) Audio × 1 (Rear)
Video & audio output	HDMI 2.0 × 1 (Rear) Audio × 1 (Rear) SPDIF × 1 (Rear)
Control interface	TOUCH-USB 3.0 × 1 (Front × 1) TOUCH-USB 2.0 × 2 (Rear × 2) RS232 × 1 (Rear)
Network Interface	LAN (1000 Mbps) × 2 (Rear) Wi-Fi AP & Station, 2.4 G/5 G Wi-Fi 6, IEEE 802.11 a/b/g/n/ac/ax 2 × 2 MIMO (2.4 GHz and 5 GHz) authentication protocols WEP, WPA, WPA2, PSK and 802.1X EAP
Data Transmission Interface	USB 3.0 × 3 (Front × 2; Rear × 1) USB 2.0 × 2 (Rear × 2) Type-C × 1 (Front × 1 ：Support USB 3.0, 65 W charging functions; support DP IN 1.4) Type-C × 1 (Rear × 1 ：Support USB 2.0, 65 W charging functions; support DP IN 1.4)
Power	
Power Supply	100 to 240 VAC, 50/60 Hz
Standby Consumption	≤ 0.5 W
Average Consumption	< 160 W
Working Environment	
Working Temperature	0 °C to 40 °C (32 °F to 104 °F)
Working Humidity	10%~90% RH
General	
VESA	600 mm × 400 mm (4 × M8-25 mm)
Accessory	Wall mount bracket, hook, user manual, touch writing pen, packing list, 3 M touch USB cable, 3.5 M HDMI cable (2.0), power cable, remote control, screen cleaning cloth.
Package Dimensions (W × H × D)	1662 × 1062 × 223 mm
Net Weight	32.2 ± 0.5 kg
Gross Weight	45.3 ± 0.5 kg
Product Dimensions （With Wall Attachment）	1488.5 × 893.4 × 113.1 mm

Product Dimensions （Without Wall Attachment）	1488.5 × 893.4 × 83.0 mm

▪ Physical Interface

Interface	Description	Interface	Description
1.SPDIF	SPDIF interface	2.Line OUT	Audio output interface
3.Line IN	Audio input interface	4.VGA IN	Video devices connection interface
5.TYPE-C	Type-C interface with DP input	6.TOUCH-USB 2	Peripheral touch interface
7.HDMI IN 2	HDMI 2 input interface	8.TOUCH-USB	Peripheral touch interface
9.HDMI IN 1	HDMI 1 input interface	10.USB	USB 2.0 interface
11.MULTI-USB 2	Multi-functional USB 3.0 interface	12.MULTI-USB 1	Multi-functional USB 3.0 interface
13.HDMI OUT	HDMI output interface	14.RS 232	RS 232 Control interface
15.LAN 1	LAN 1 interface	16. LAN 2	LAN 2 interface
A.USB	USB 3.0 interface	B.USB	USB 3.0 interface
C.TOUCH-USB	Peripheral touch interface	D.HDMI IN	HDMI input interface
E.TYPE-C	Type-C interface with DP input	F.	Light sensor
G.	Remote-control unit	H.	Power Key
J.	Volume -	K.	Volume +
L.	Android host menu	M.	Return
N.	Control menu	P.	PC shutdown
R.	NFC area		

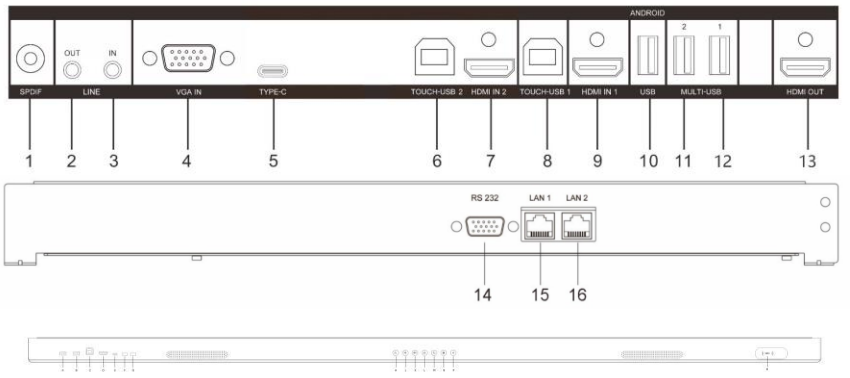

▪ Installation

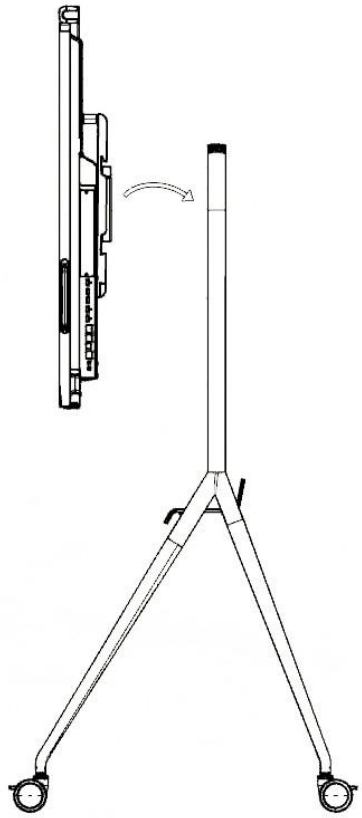

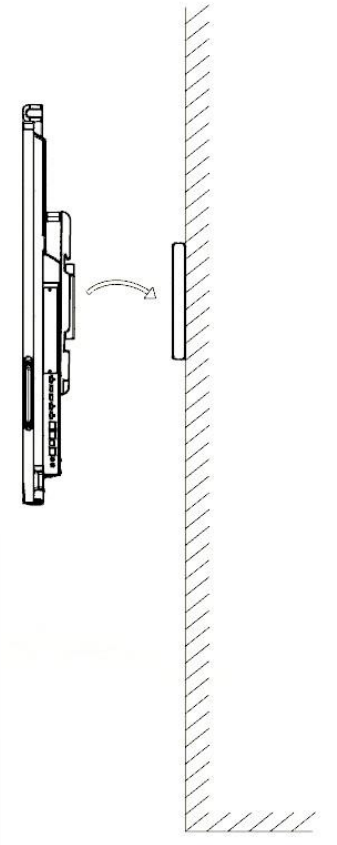

- **Available Model**

  DS-65NPE-NLT(EDLA)

- **Dimension**

If the equipment is installed embedded in the wall, reserve at least 50mm from each side.

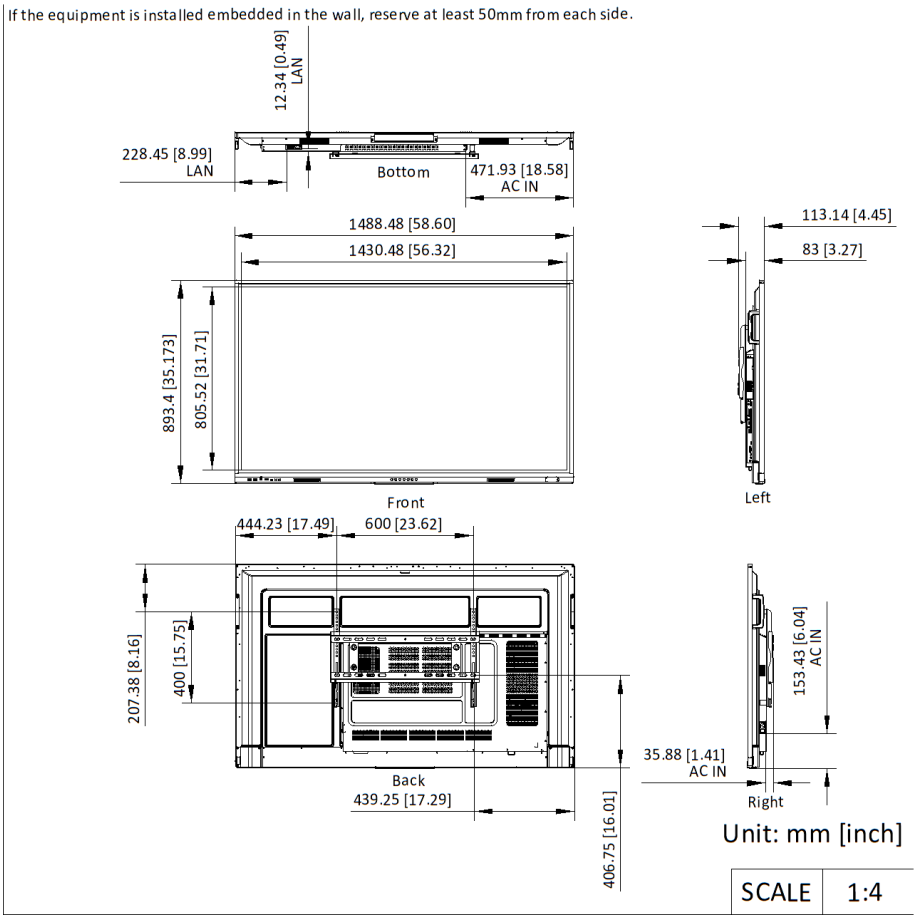

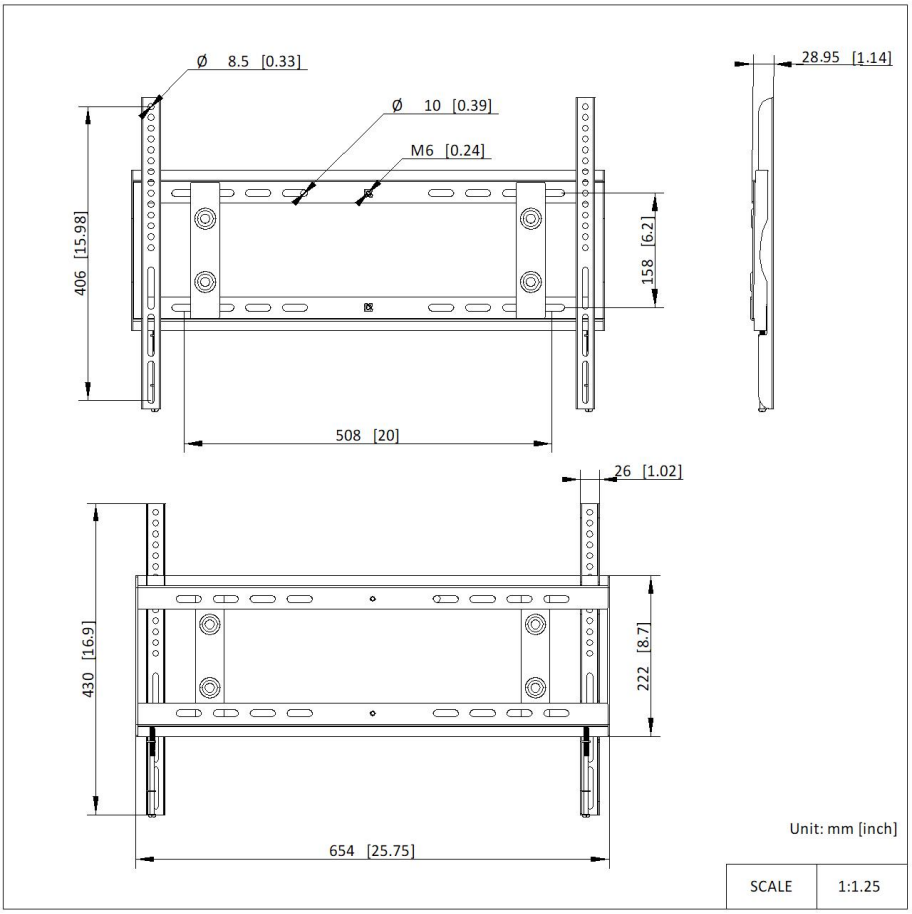

▪ Accessory

▪ Optional

iDS-UVC-X28	DS-D5AC12T7-16S5	DS-D5AC12T5-8S2	DS-D5SC3B-W	DS-D5SC3B-B
				

DS-D5ABKY2-S	DS-UVC-X12
	

See Far, Go Further

www.hikvision.com
support@hikvision.com

© Hangzhou Hikvision Digital Technology Co., Ltd. Unless otherwise agreed, Hikvision makes no warranties, express or implied. We reserve the right to introduce modifications without notice.

HIKVISION®